U.S. Department of Health & Human Services

National Institutes of Health
Turning Discovery Into Health

Ebola Virus Disease: Information for U.S. Healthcare Workers

MENU

Previous article

Next article

Packaging and Shipping Clinical Specimens Diagram

Download image

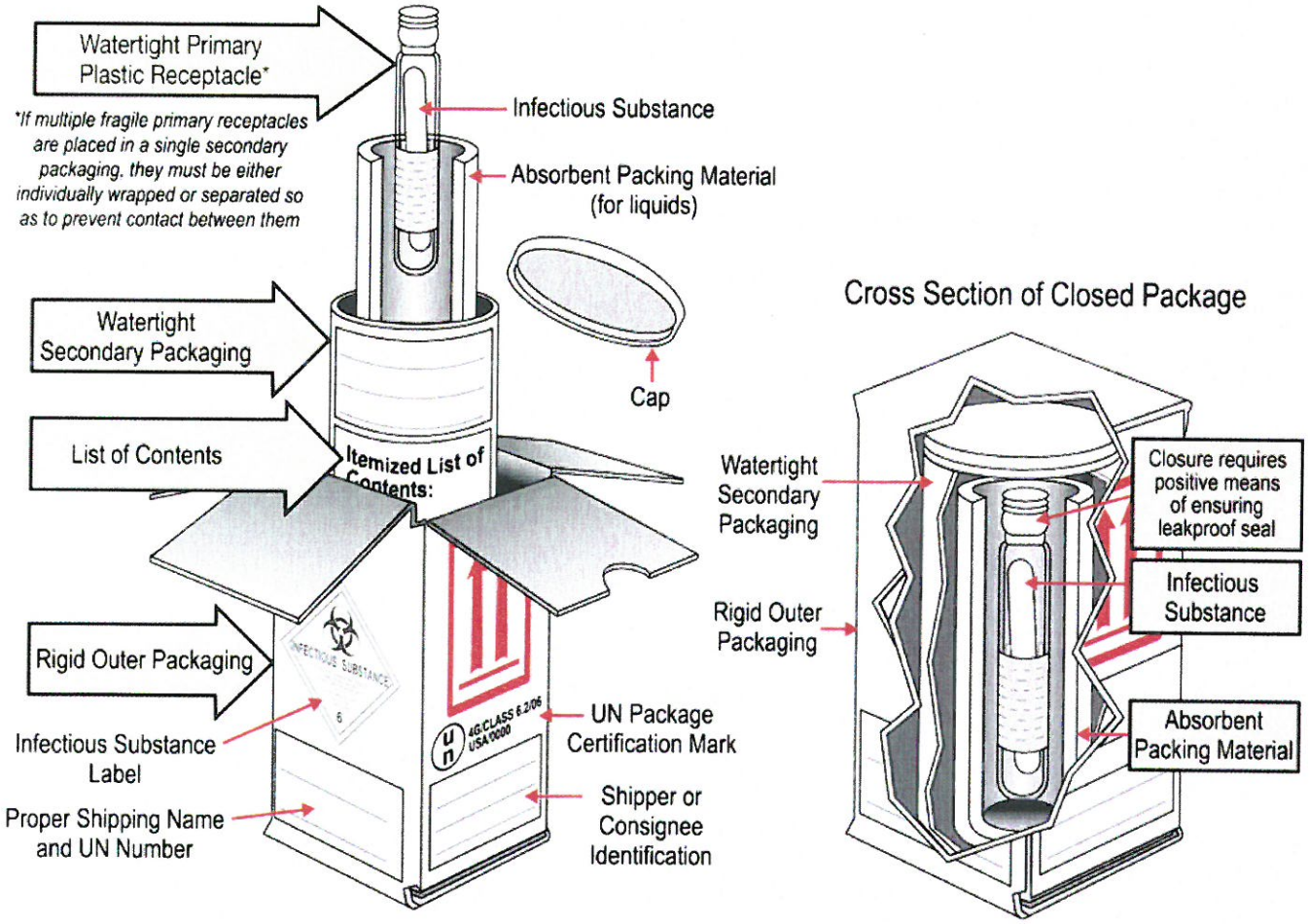

Content provided and maintained by the US Centers for Disease Control and Prevention (CDC). Please see our system usage guidelines and disclaimer.